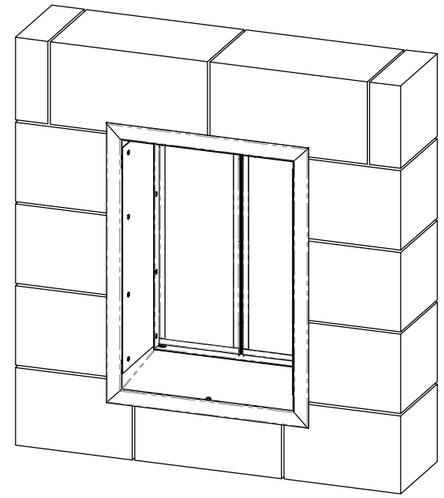

L. F. SCHMIDT
LICENSE
No. 43409
STATE OF FLORIDA
PROFESSIONAL ENGINEER

Digitally signed by Lyndon F Schmidt
Date: 2023.10.04 13:42:11 -04'00'

This item has been digitally signed and sealed by **L. F. Schmidt, P.E.** on the date adjacent to the seal.

Printed copies of this document are not considered signed and sealed and the signature must be verified on any electronic copies.

THIS PRODUCT APPROVAL IS VALID ONLY FOR THE STATE OF FLORIDA

BG WALL MOUNT DOG DOOR

FOR INSTALLATION INTO 2X STUD OR MASONRY WALL

"NON-IMPACT"

GENERAL NOTES

1. This product has been evaluated and is in compliance with the 8th Edition (2023) Florida Building Code (FBC) structural requirements excluding the High Velocity Hurricane Zone (HVHZ).
2. Product anchors shall be as listed and spaced as shown on details. Anchor embedment to base material shall be beyond wall dressing or stucco
3. When used in areas requiring wind borne debris protection, this product is required to be protected with an impact resistant covering that complies with FBC Sections 1609.1.2 & R301.2.1.2.
4. This product has been tested in the 2X stud framing and masonry block as specified in this approval. The adequacy of the 2X stud framing and masonry block to support the applied wind loads is beyond the scope of this approval. In all cases, the installation shall be approved for use by the local Authority Having Jurisdiction and may require further engineering analysis by a licensed engineer or registered architect.

TABLE OF CONTENTS

SHEET #	DESCRIPTION
1	Typical Elevations, Design Pressures & General Notes
2	BG Wall Mount Details
3	2X Stud Framing Installation Details
4	Masonry Block Installation Details
5	Bill of Materials & Components

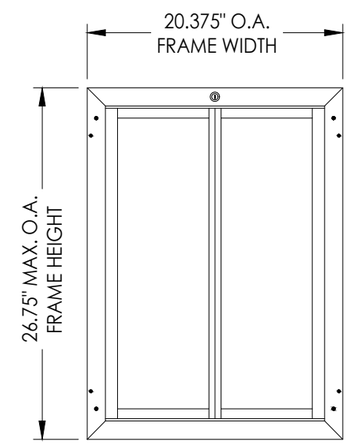

INTERIOR VIEW

BG WALL MOUNT SERIES (X-LARGE)

DOG DOOR MODEL	MAX. ASSEMBLY SIZE	w/ INTERIOR SECURITY COVER	DESIGN PRESSURE (PSF)	
			POSITIVE	NEGATIVE
BG WALL MOUNT	20.375" x 26.625"	NO	+50.0	-50.0
		YES	+75.0	-75.0

Documents Prepared By:
Lyndon F. Schmidt
P.E. No. 43409
RW BUILDING CONSULTANTS, INC.
P.O. Box 230, Valrico, FL 33595
Phone No.: 813.659.9197
FBPE Registry License No. 9813

PRODUCT: PDUSA, INC. BG WALL MOUNT

PART OR ASSEMBLY: TYPICAL ELEVATIONS, DESIGN PRESSURES & GENERAL NOTES

REVISIONS

NO.	DATE		BY
1	10/4/23	UPDATE TO 8TH ED. (2023) FBC	LFS

DATE: 12/05/22
SCALE: N.T.S.
DWG. BY: LFS
CHK. BY: RW
DRAWING NO.: FL-41814.7
SHEET 1 OF 5

© 2022 R.W. BUILDING CONSULTANTS INC.

Z:\2023 FBC Drawings\PDUSA, Inc\FL-41814 R1\FL-41814.7.dwg

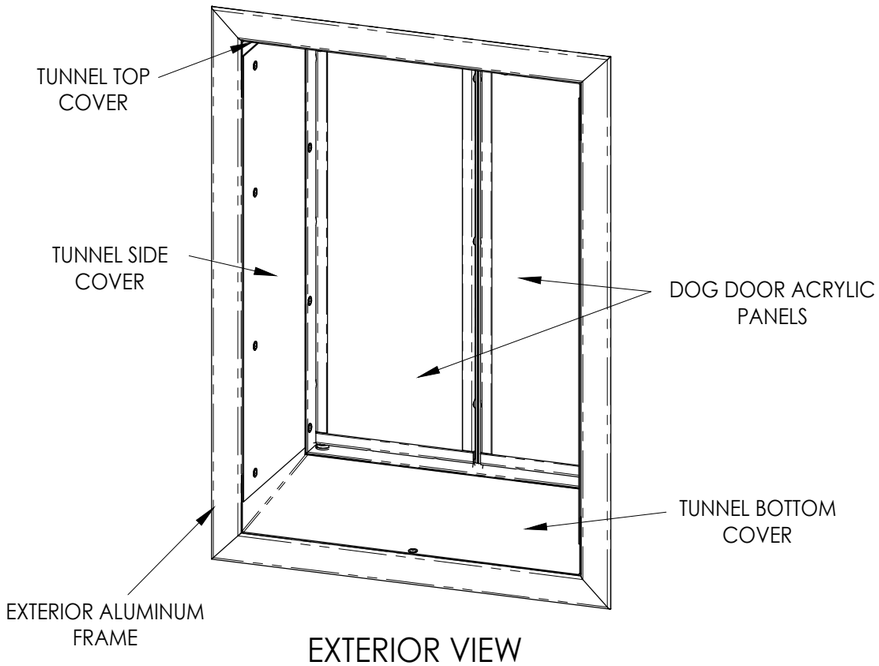

EXTERIOR VIEW

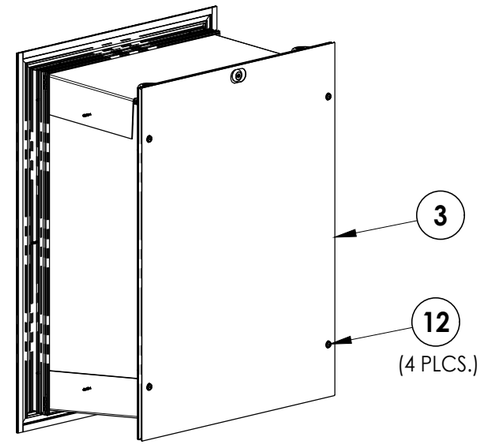

INTERIOR SECURITY COVER

REQUIRED FOR DESIGN PRESSURE > 50 PSF

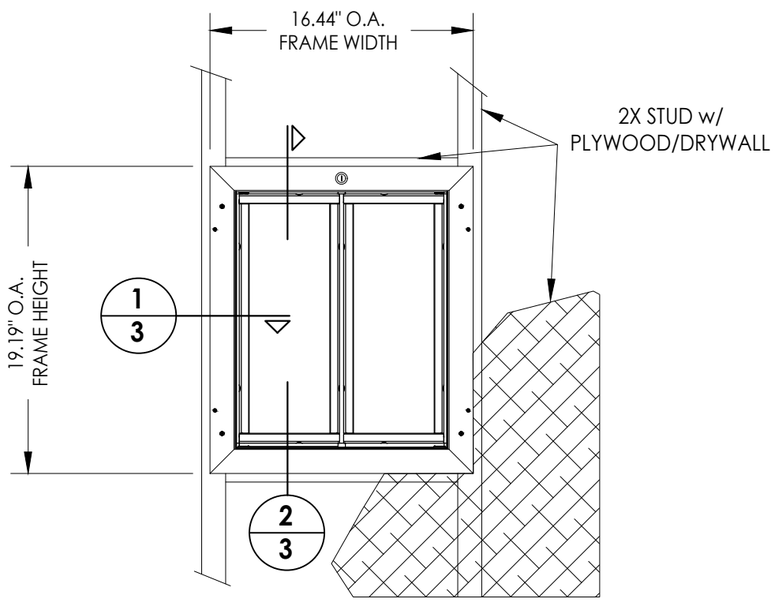

INTERIOR VIEW

Large Size Dog Door Shown

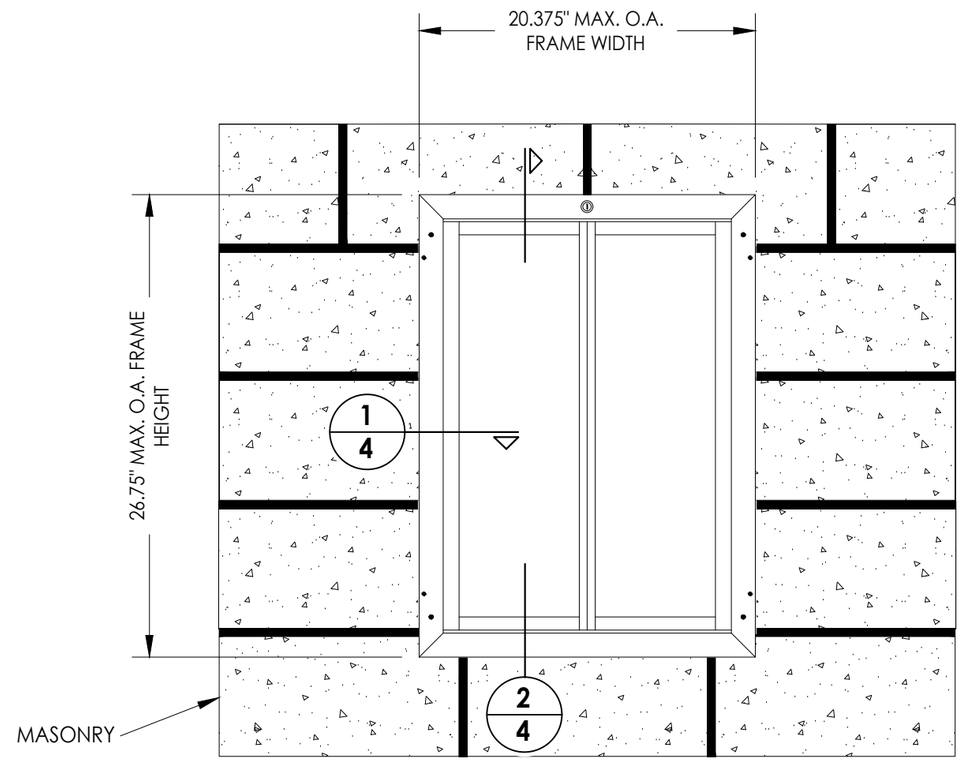

INTERIOR VIEW

X-Large Size Dog Door Shown

Documents Prepared By:
Lyndon F. Schmidt
P.E. No. 43409

R.W. BUILDING CONSULTANTS, INC.
P.O. Box 230, Valrico, FL 33595
Phone No.: 813.659.9197
FBPE Registry License No. 9813

PRODUCT: PDUSA, INC. BG WALL MOUNT

PART OR ASSEMBLY: BG WALL MOUNT DETAILS

NO.	DATE	REVISIONS	BY
1	10/4/23	UPDATE TO 8TH ED. (2023) FBC	LFS

DATE: 12/05/22
SCALE: N.T.S.
DWG. BY: LFS
CHK. BY: RW
DRAWING NO.: FL-41814.7
SHEET 2 OF 5

© 2022 R.W. BUILDING CONSULTANTS INC.

Z:\2023 FBC Drawings\PDUSA, Inc\FL-41814 R1\FL-41814.7.dwg

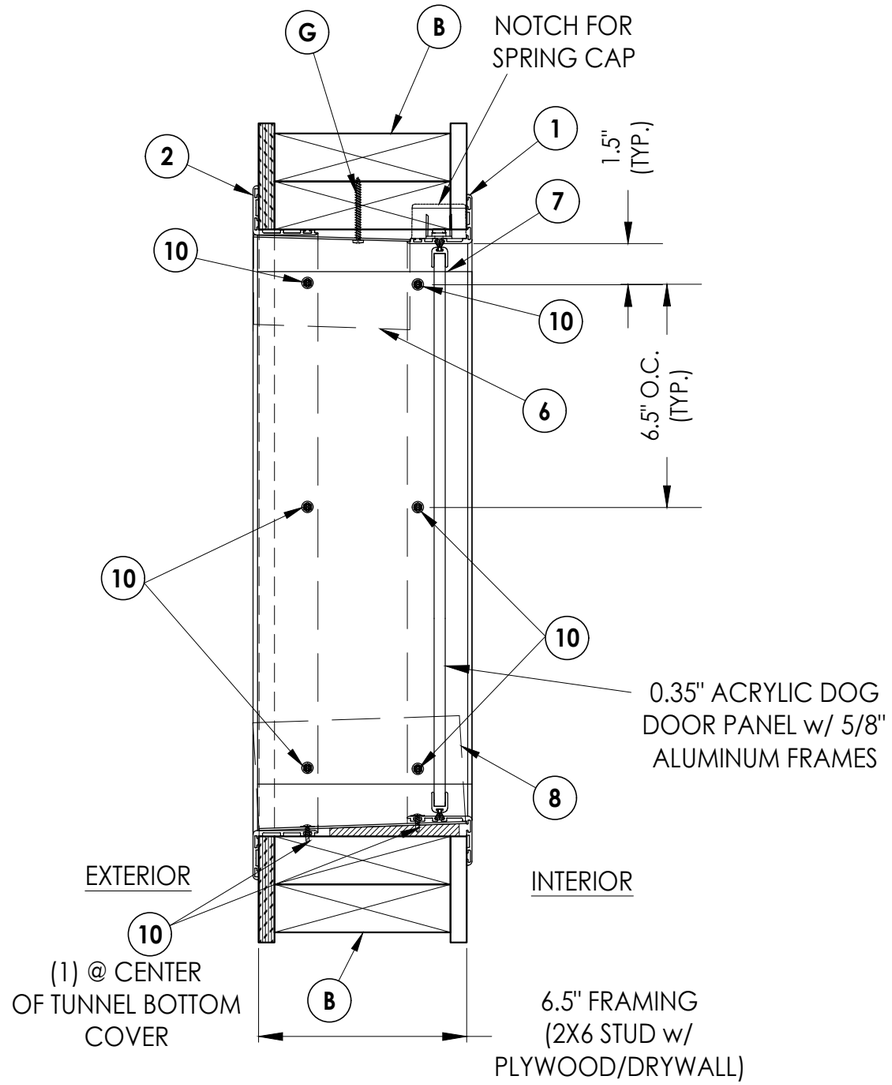

1/3 VERTICAL CROSS SECTION

Shown w/ Large Size Dog Door
2X Stud Framing Installation

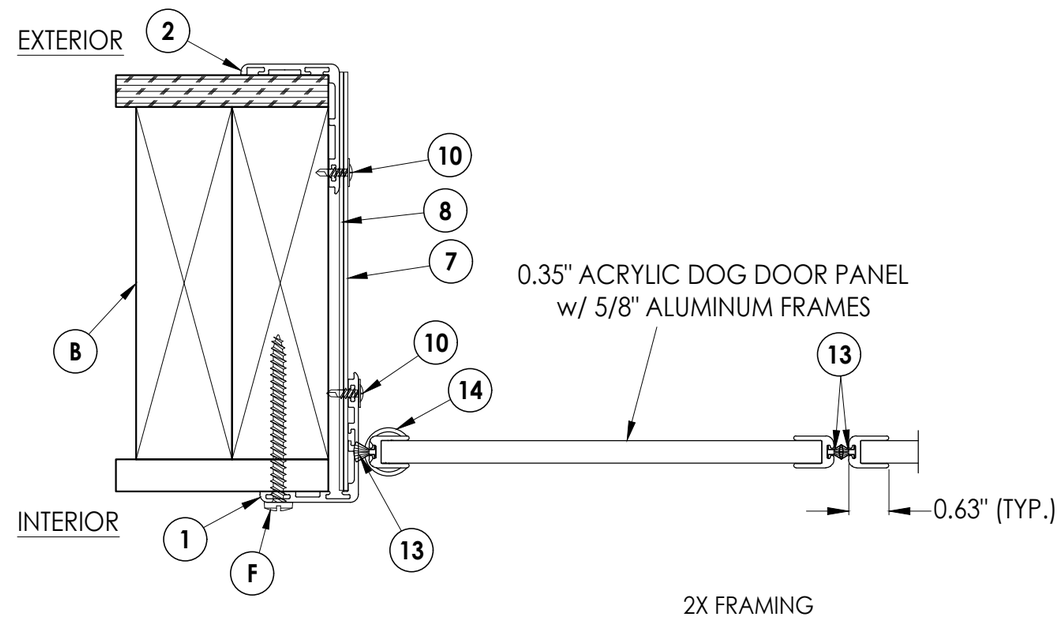

2/3 HORIZONTAL CROSS SECTION

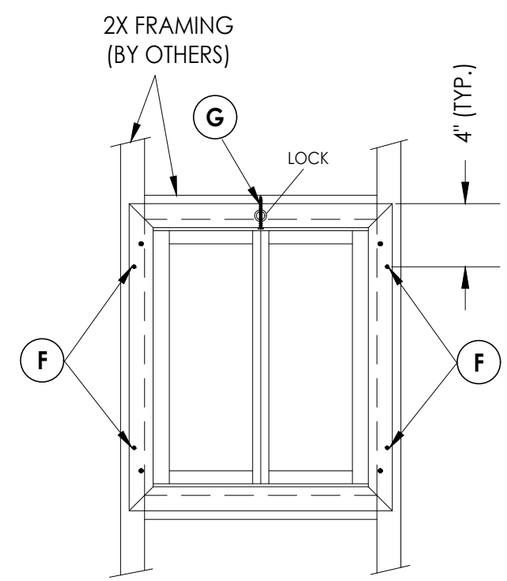

INTERIOR FRAME ANCHORING

Documents Prepared By:
Lyndon F. Schmidt
P.E. No. 43409

RW BUILDING CONSULTANTS, INC.
P.O. Box 230, Valrico, FL 33595
Phone No.: 813.659.9197
FBPE Registry License No. 9813

PRODUCT: PDUSA, INC. BG WALL MOUNT

PART OR ASSEMBLY: 2X STUD FRAMING INSTALLATION DETAILS

NO.	DATE	REVISIONS	BY
1	10/4/23	UPDATE TO 8TH ED. (2023) FBC	LFS

DATE: 12/05/22
SCALE: N.T.S.
DWG. BY: LFS
CHK. BY: RW
DRAWING NO.: FL-41814.7
SHEET 3 OF 5

© 2022 R.W. Building Consultants Inc.

Z:\2023 FBC Drawings\PDUSA, Inc\FL-41814 R1\FL-41814.7.dwg

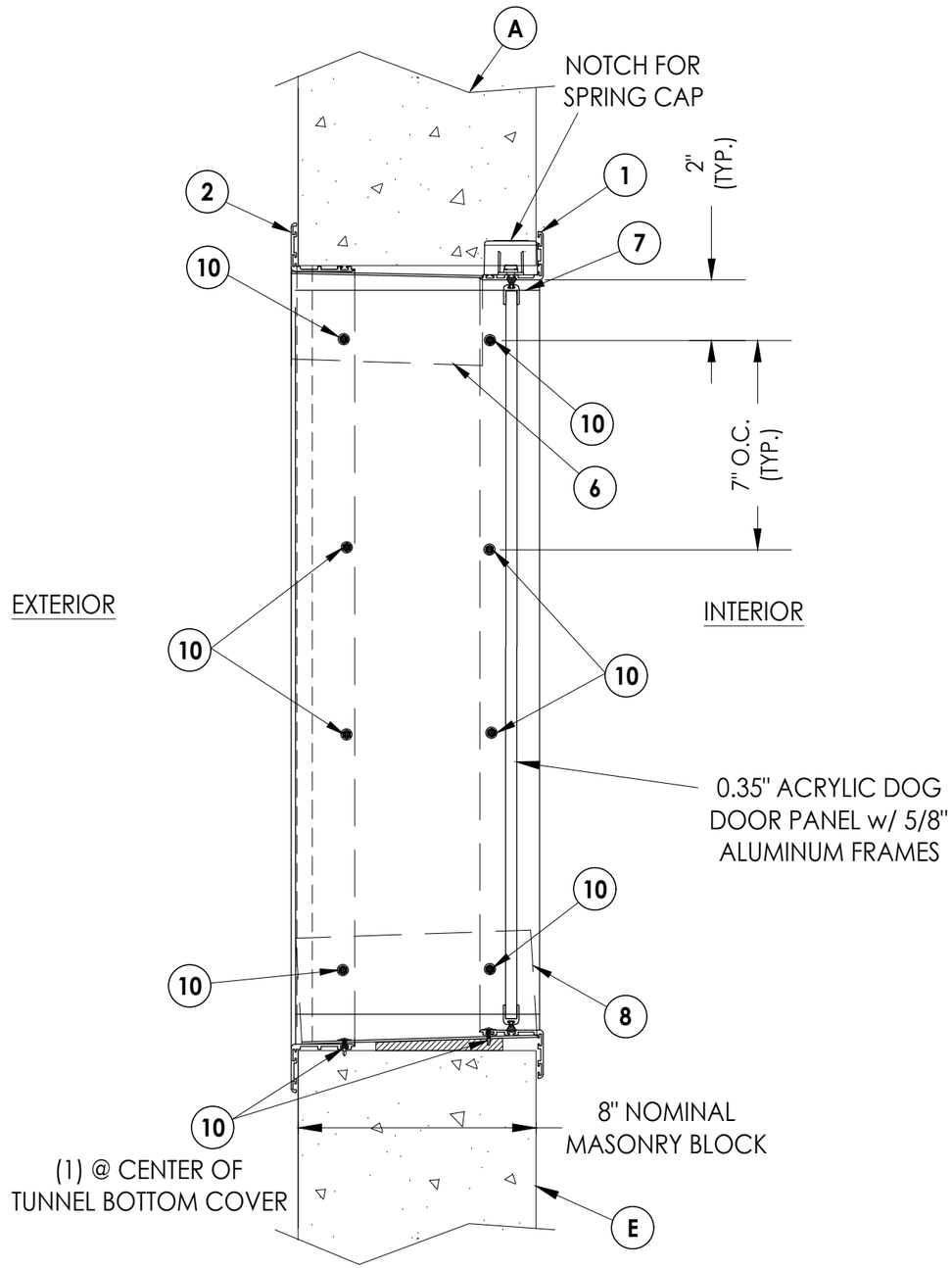

1/4 VERTICAL CROSS SECTION
Shown w/ X-Large Size Dog Door
Masonry Framing Installation

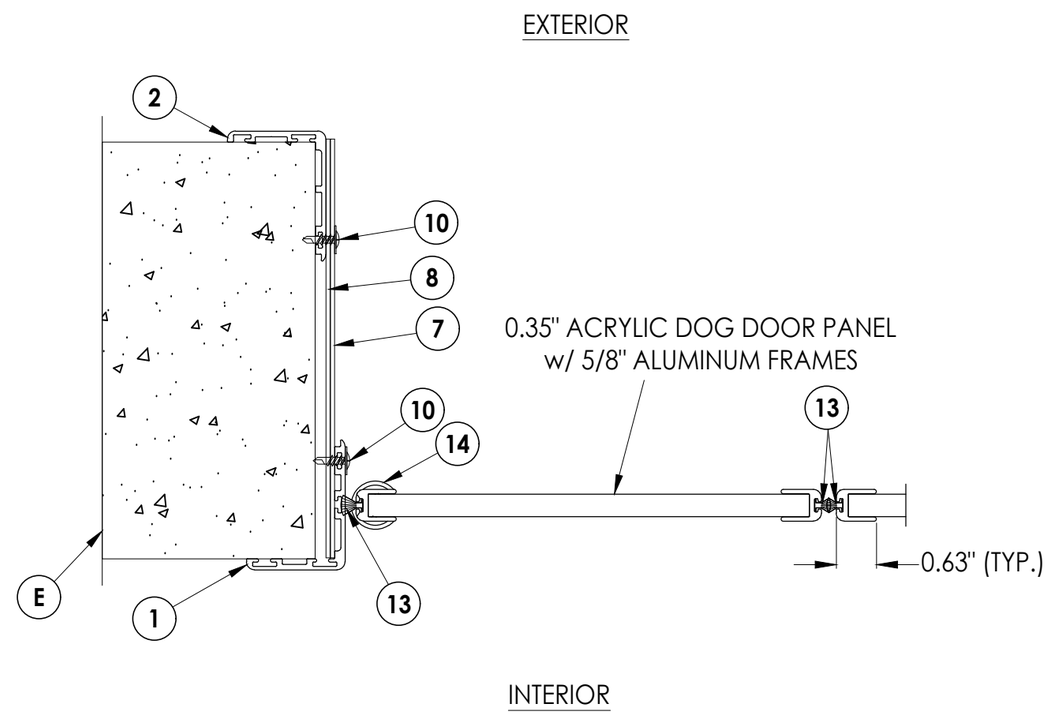

2/4 HORIZONTAL CROSS SECTION

Documents Prepared By:
Lyndon F. Schmidt
P.E. No. 43409

RW BUILDING CONSULTANTS, INC.
P.O. Box 230, Valrico, FL 33595
Phone No.: 813.659.9197
FBPE Registry License No. 9813

PRODUCT: PDUSA, INC. BG WALL MOUNT

PART OR ASSEMBLY: MASONRY BLOCK INSTALLATION DETAILS

NO.	DATE	BY
1	10/4/23	LFS
	UPDATE TO 8TH ED. (2023) FBC	

REVISIONS

DATE: 12/05/22
SCALE: N.T.S.
DWG. BY: LFS
CHK. BY: RW
DRAWING NO.: FL-41814.7
SHEET 4 OF 5

© 2022 R.W. Building Consultants Inc.

Z:\2023 FBC Drawings\PDUSA, Inc\FL-41814 R1\FL-41814.7.dwg

BILL OF MATERIALS

ITEM #	DESCRIPTION	MATERIAL
B	2X FRAMING (G = 0.42)	WOOD
E	MASONRY - HOLLOW BLOCK CONFORMING TO ASTM C90	CONCRETE
F	#10 X 2" PPH SMS	STEEL
G	#8 X 1-1/2" PPH SMS	STEEL
1	INTERIOR FRAME (BG WALL MOUNT SERIES)	ALUM
2	EXTERIOR FRAME (BG WALL MOUNT SERIES)	ALUM
3	INTERIOR SECURITY PANEL (0.045" STEEL)	STEEL
6	TUNNEL TOP COVER (0.060" X 5" X 17" U-SHAPE ALUMINUM PLATE)	ALUM
7	TUNNEL SIDE COVERS (0.060" X 6" X 15.5" ALUMINUM PLATE)	ALUM
8	TUNNEL BOTTOM COVER (0.060" X 6" X 18" U-SHAPE ALUMINUM PLATE)	ALUM
10	#8 X 1/2" TRUSS HEAD SELF-DRILLING SMS	STEEL
12	#10-32 X 1/2" PH MACHINE SCREW w/ RIVET NUT	STEEL
13	WEATHERSTRIP	-
14	DOG DOOR PIVOT	-

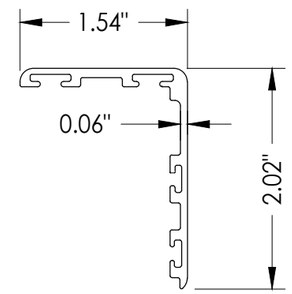

1 INTERIOR FRAME

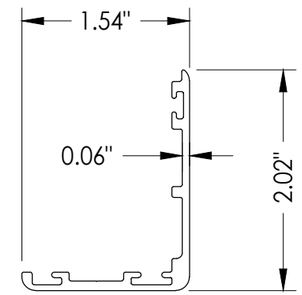

2 EXTERIOR FRAME

Documents Prepared By:
Lyndon F. Schmidt
P.E. No. 43409

RW BUILDING CONSULTANTS, INC.
P.O. Box 230, Valrico, FL 33595
Phone No.: 813.659.9197
FBPE Registry License No. 9813

PRODUCT: PDUSA, INC. BG WALL MOUNT

PART OR ASSEMBLY: BILL OF MATERIALS & COMPONENTS

REVISIONS

NO.	DATE		BY
1	10/4/23	UPDATE TO 8TH ED. (2023) FBC	LFS

DATE: 12/05/22
SCALE: N.T.S.
DWG. BY: LFS
CHK. BY: RW
DRAWING NO.: FL-41814.7
SHEET 5 OF 5

© 2022 R.W. Building Consultants Inc.

Z:\2023 FBC Drawings\PDUSA, Inc\FL-41814 R1\FL-41814.7.dwg